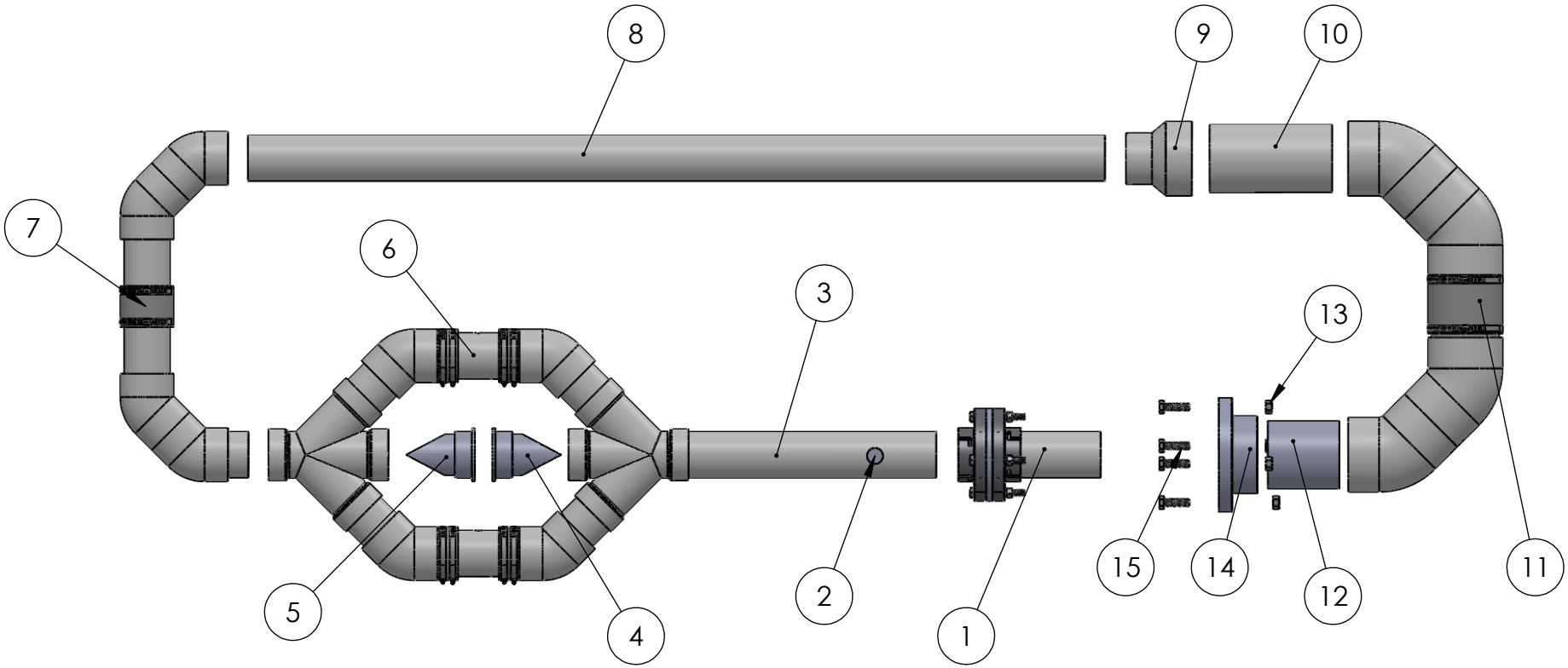

NOTE:
1. ALL PVC TO PVC PIPE CONNECTIONS USE PVC CEMENT
2. 2.END CAP USES LIQUID GASKET

	UNLESS OTHERWISE SPECIFIED:		NAME	DATE
	DIMENSIONS ARE IN INCHES TOLERANCES: 0.025 ANGULAR: MACH ± BEND ± TWO PLACE DECIMAL ± THREE PLACE DECIMAL ±	DRAWN	TC	3/28/24
		CHECKED		
		ENG APPR.		
		MFG APPR.		
	STOCK SIZE:	Q.A.		
	MATERIAL	COMMENTS:		
Next Highest Assy	FINISH			
MET271-000				

2024 ENGINEERING PROJECT

TITLE:

FULL PLUMBING ASSEMBLY

SIZE	DWG. NO.	REV
A	MET271-100	

SCALE: 1:32 WEIGHT: SHEET 1 OF 2

SOLIDWORKS Educational Product. For Instructional Use Only.

ITEM NO.	PART NUMBER	DESCRIPTION	QTY.
1	MET271-104	PIPE TO CONNECT TO FLOW CHAMBER	1
2	F-30400P	FLOWMETER	1
3	MET271-100-001	L=26 IN	1
4	MET271-110	LOAD CELL CAP	1
5	MET271-100-002	WYE CAP	1
6	MET271-101	THRUSTER ASSEMBLY	1
7	MET271-103	4 INCH 90	1
8	MET271-105-001	4 INCH L=84 INCH	1
9	182570	4 INCH TO 6 INCH TAPER	1
10	MET271-109	6 INCH L=12 INCH	1
11	MET271-102	6 INCH 90	1
12	MET271-109-002	6 IN L=7 INCH	1
13	1WB48	3/4 INCH NUT	4
14	22JY91	6 INCH FLANGE	1
15	41UD53	3/4 X 5IN INCH BOLT	4
16	150887	PVC CEMENT(NOT SHOWN)	1
17	49CR93	LIQUID GASKET(NOT SHOWN)	1

SOLIDWORKS Educational Product. For Instructional Use Only.